TYPE	SIZE	UNIT STYLE
NP	3F	PO

DIMENSIONS 103-109

Section	100
Effective	November 2001
Replaces	April 1993
Page 1/5	

RIGHT HAND ROTATION. FOR LEFT HAND ROTATION, SHAFT PROJECTION IS OPPOSITE THAT SHOWN.

* TOLERANCE $\pm\frac{1}{8}$

TOLERANCE ON OTHER DIMENSIONS $\pm\ \frac{1}{4}$

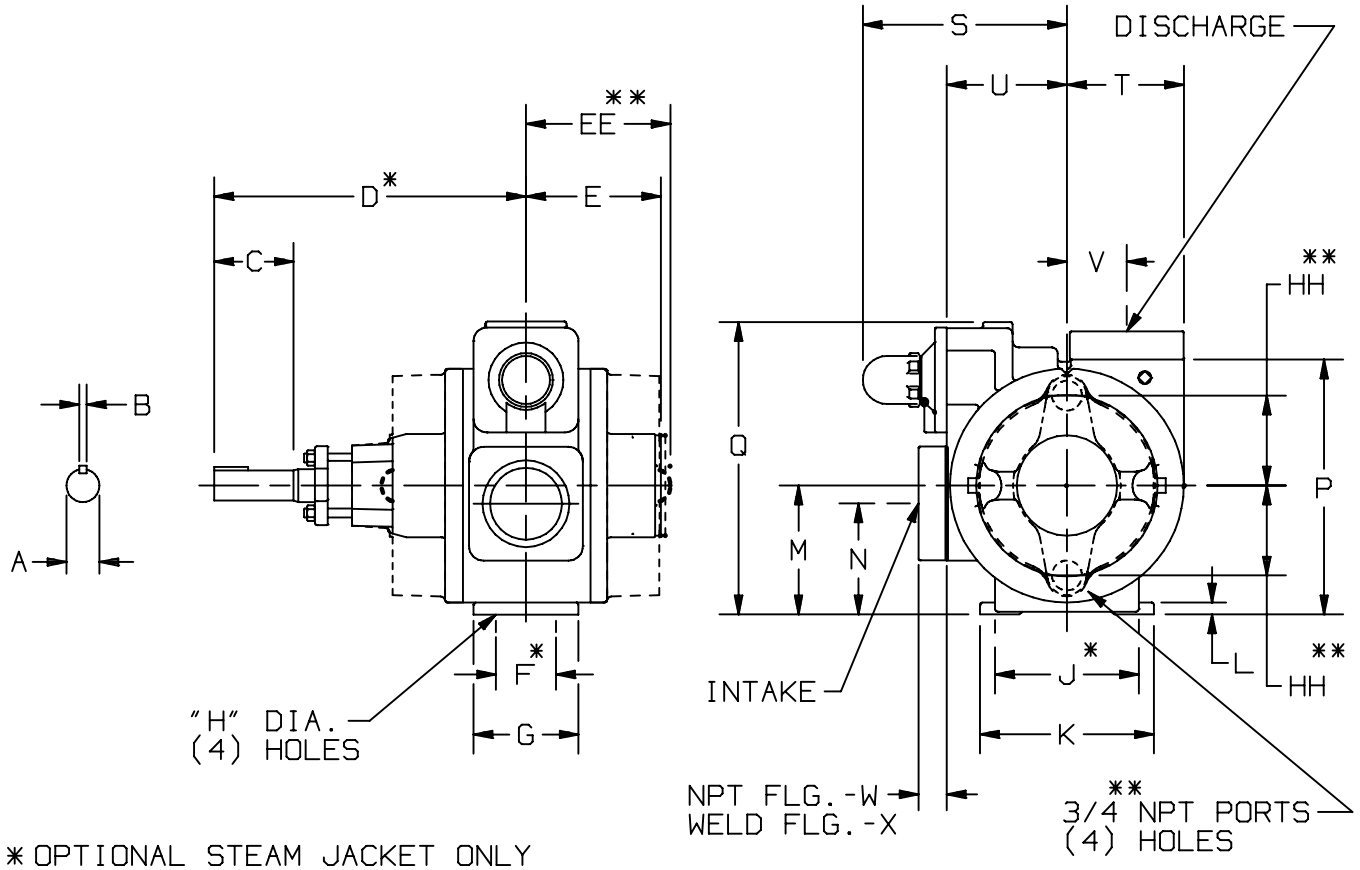

** OPTIONAL STEAM JACKET ONLY

MOTOR			UNITS	DIMENSIONS									
FRAME SIZE				A	B	C	D	E	F	G	H	J	K
			IN	1 1/4	1/4	3 5/16	13	5 5/8	2 1/2	4 3/8	5/8	6	7 1/4
			MM	31,8	6,4	84,1	330,2	142,9	63,5	111,1	15,9	152,4	184,2
				L	M	N	P	Q	R	S	T	U	V
			IN	1/2	5 3/8	4 5/8	10 5/8	12 1/4	—	8 9/16	4 7/8	5	2 1/2
			MM	12,7	136,6	117,5	269,9	311,2	—	217,5	123,8	127	63,5
				W	X	Y	Z	AA	BB	CC	DD	EE	FF
			IN	1 1/8	1 1/4	—	—	—	—	—	15	6 1/8	—
			MM	28,6	31,8	—	—	—	—	—	381	155,7	—
				GG	HH					PUMP WEIGHT	WITH STD. FLANGES	** WITH JACKETED HEADS	
			IN	—	3 3/4					LBS	134	158	
			MM	—	92,3					KG	61	71,7	

NOTE: FOR ANSI AND DIN FLANGE DIMENSIONS, SEE DIMENSION SHEET 103-115