Data Sheet

Itemnumber....: 5541000209

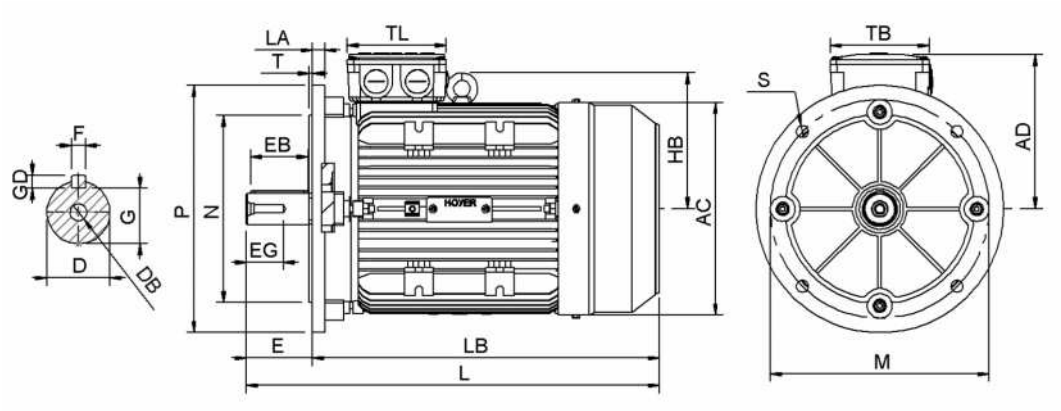

AC = 198	**DB = M10**	**EG = 28**	**GD = 7**	**LA = 14**	**N = 180**	**T = 4**
AD = 147	**E = 60**	**F = 8**	**H = 100**	**LB = 346**	**P = 250**	**TB = 100**
D = 28	**EB = 50**	**G = 24**	**L = 406**	**M = 215**	**S = 4-Ø14,5**	**TL = 100**

Version
Type.....: HMA3 100L1-4
Design.....: Induction motor
Standard series.....: IEC 60034
Phase / Voltage range.....: 3~ / Low

Electrical design
Efficiency.....: IE3
Pole.....: 4
Power at 50 Hz (kW).....: 2,20
Hz.....: 50
Voltage.....: 230VD/400VY
Winding voltage.....: 230VD/400VY 50 Hz
Power output (kW).....: 2,20
Duty.....: S1
Insulation class.....: F
Temperature rise.....: B

Motor protection
Thermal protection main....: PTC 3x 155 dgr
Thermal protection second..: None
Space heater.....: None
Temperature detector.....: No
SPM.....: No
IR wire.....: No
Tropical insulation.....: No

Explosion protection
According to.....: None
Type of protection.....: None

General
Direction of rotation.....: CW
Painting.....: RAL 9005 Gloss 3
Nameplate.....: Multivoltage
Special packing.....: No
Special requirements.....: No

Mechanical design
Frame size.....: 100
Mounting.....: B5
Rain cap.....: No
Protection class.....: IP55
Cooling method.....: IC411/TEFC
External grounding.....: Yes
Drain hole.....: Yes
Frame material.....: Aluminium
Material approval.....: None
Shaft.....: IEC standard
Key.....: Closed key
Balancing.....: Half key balancing
Vibration class.....: Grade-A
Weight (kg).....: 27,0

Environment condition
Ambient temp. min. (°C)..: -20
Ambient temp. max. (°C)..: 40
Altitude (mtr up to).....: 1000

Bearing
DE Bearing.....: 6206-ZZ/C3
NDE Bearing.....: 6206-ZZ/C3
Fixed bearing.....: DE

Terminal box
Tbox position.....: Top
Cable entry direction.....: Right (from DE)
Cable entry
Main.....: 2 x M20x1,5
Plastic blindcaps
Accessory.....: 1 x M20x1,5
Plastic blindcap
Connection type.....: Star (Y)
Terminal board thread.....: 6-M4

Test values
Rotor inertia (kgm²).....: 0,0093
Noise level (dB(A)).....: 56
No load current (A).....: 2,44
Winding resist. (ohm).....: 1,90
Starting time (sec.).....: 0,04
Temp. rise winding (K).....: 48
Temp. rise surface (K).....: 35

Rated power (kW) . . . . . :	2,20	2,14	2,65	2,55
Frequency (Hz) . . . . . :	50	50	60	60
Voltage (V) . . . . . :	230 400	220 380	280 480	440
Connection . . . . . :	D Y	D Y	D Y	Y
Full load current (A) . . . :	7,95 4,60	8,20 4,75	7,95 4,60	4,75
Speed (rpm) . . . . . :	1460	1460	1750	1750
Power factor cos(phi) . . . :	0,80	0,81	0,80	0,82
Efficiency, 100/75/50 (%) :	86,8/87,0/85,4	86,8/87,0/85,4	86,8/87,0/85,4	85,8/86,1/84,3
Ist/In . . . . . :	8,15	7,15	8,15	7,50
Full load torque (Nm) . . . :	14,4	14,0	14,4	14,0
Tst/Tn . . . . . :	3,00	2,80	3,00	2,60
Tmax/Tn . . . . . :	3,30	3,05	3,30	2,85
Duty . . . . . :	S1	S1	S1	S1
Ambient temp. (°C) . . . . . :	40	45	40	45

Data are not binding. Hoyer reserves the right to implement changes without notice. The extent of data are not equivalent to nameplate on the motors.